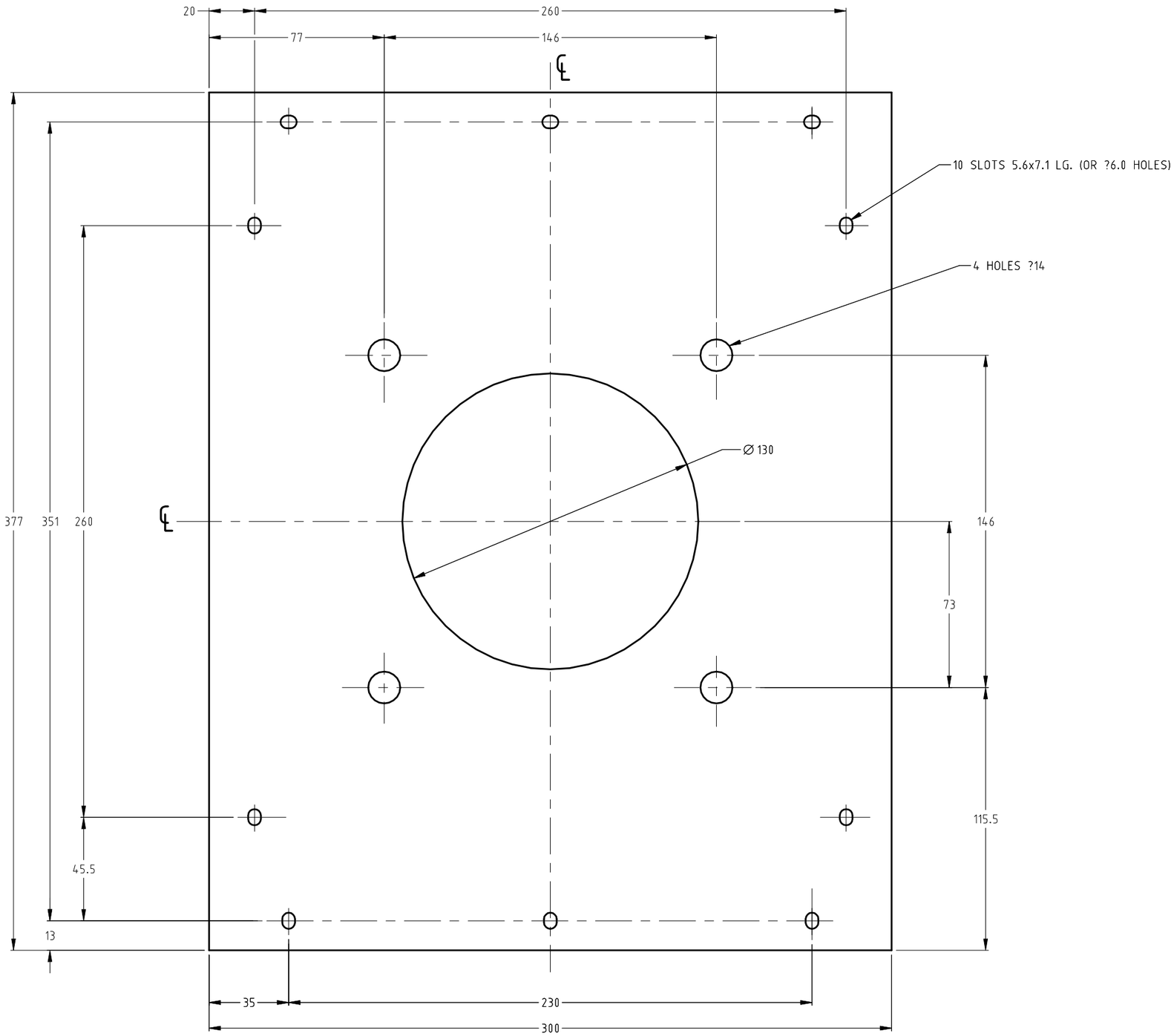

FOR INFORMATION ONLY

DETAILS DERIVED FROM
DRG NO. 93746–110–1R1

CABINET BASE PLATE MOUNTING DETAILS

C(S)1512

21/05/2007 10:7:18 AM X:\CIVIL STANDARD DRAWINGS\6 TRAFFIC\6 - C(S)1500 SERIES STANDARDS\C(S)1512 - TRAFFIC CABINET BASE DEATILS (FOR INFO ONLY).dgn